| 42" X 72'-0" RADIAL STACKER | | | | |
|---|---|---|---|---|
| ITEM | QTY | DESCRIPTION | MARK | DRAWING |
| 1 | 1 | SWIVEL PLATE | MK-SP1 | D-8644 |
| 2 | 1 | SWIVEL BRACKET | MK-SB1 | D-8644 |
| 3 | 1 | LOWER SUPPORT FRAME | MK-LSF | D-8645 |
| 4 | 2 | ADJUSTING BRACKET | MK-AB1 | D-8572 |
| 5 | 1 | AXLE | MK-AX1 | D-8572 |
| 6 | 1 | UPPER SUPPORT FRAME | MK-USF | D-8646 |
| 7 | 1 | SKIRT HOPPER | MK-HP1 | D-8660 |

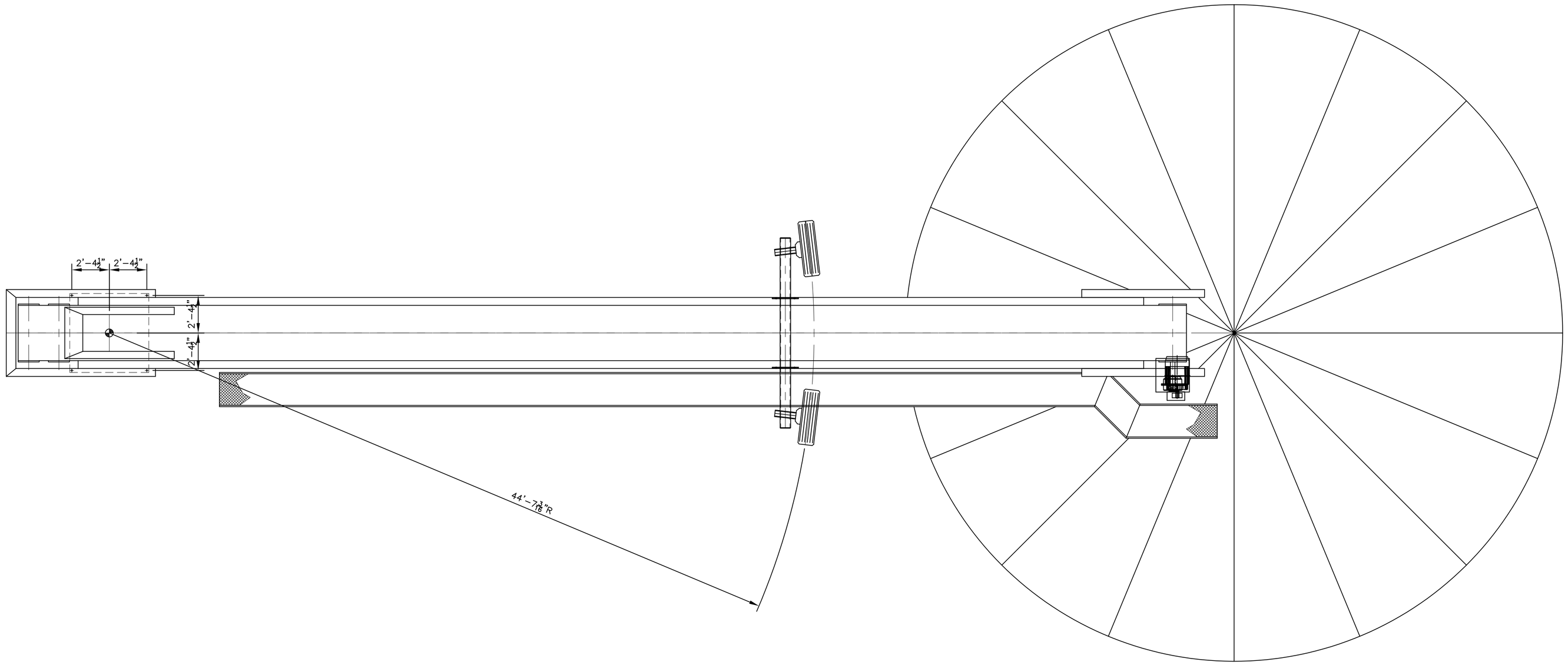


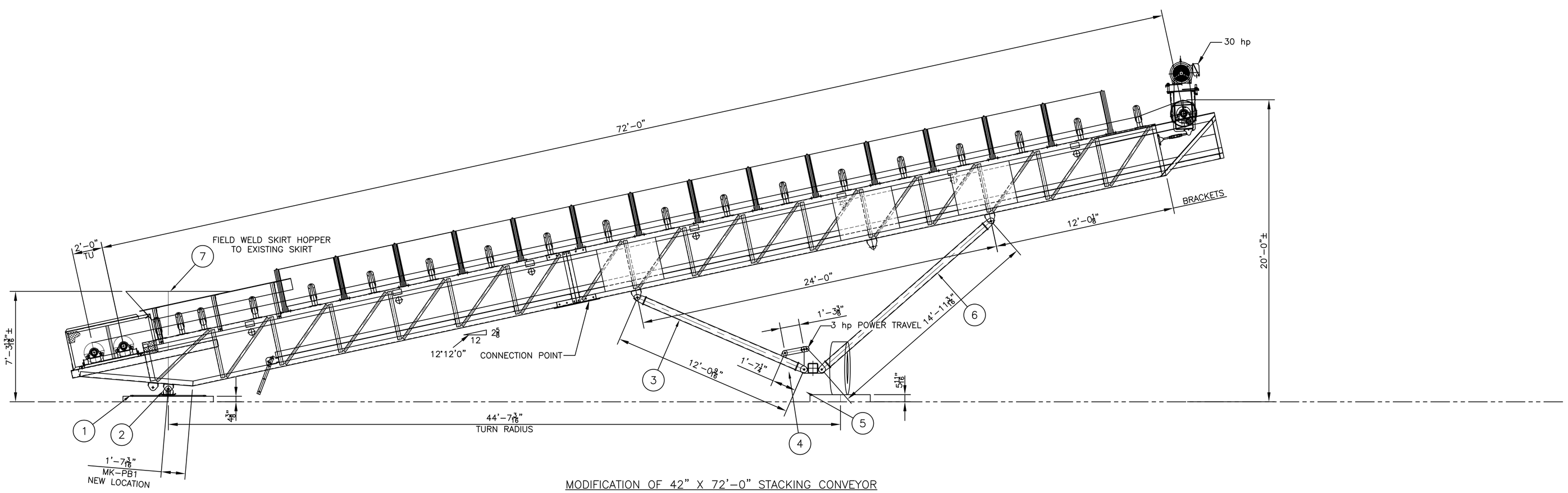


MODIFICATION OF 42" X 72'-0" STACKING CONVEYOR

U.S. EQUIPMENT DISTRIBUTORS

NOTE:
WORK THIS DWG. W/DWG.# D-8624-L

**U.S.EQUIPMENT DISTRIBUTORS**
HUNTINGTON,WV 25705
PHONE NO. (304) 525-0002

| SCALE 1/4"=1'-0" | REVISIONS | BY | DATE |
|---|---|---|---|
| DATE 9/26/07 | | | |
| DR'N. PAC CKD. | | | |
| AP'VD. | | | |

TITLE: 42" X 72' RADIAL STACKER

NO. D-8624-LA