| 4060D CRUSHER PLATFORM | | | | |
|---|---|---|---|---|
| ITEM | QTY | DESCRIPTION | MARK | DRAWING |
| 1 | 2 | PLATFORM STAIRS | MK–PLST | D–8651 |
| 2 | 1 | WALKWAY PLATFORM | MK–WP1–L | D–8650 |
| 3 | 1 | WALKWAY PLATFORM | MK–WP1/R | D–8650 |
| 4 | 6 | KNEE BRACE | MK–KB1 | D–8650 |
| 5 | 1 | CRUSHER PLATFORM | MK–CP1 | D–8648 |
| 6 | 1 | CRUSHER FEED CHUTE | MK–CFC | D–8652 |
| 7 | 1 | CRUSHER UNDERFLOW | MK–CUF | D–8653 |

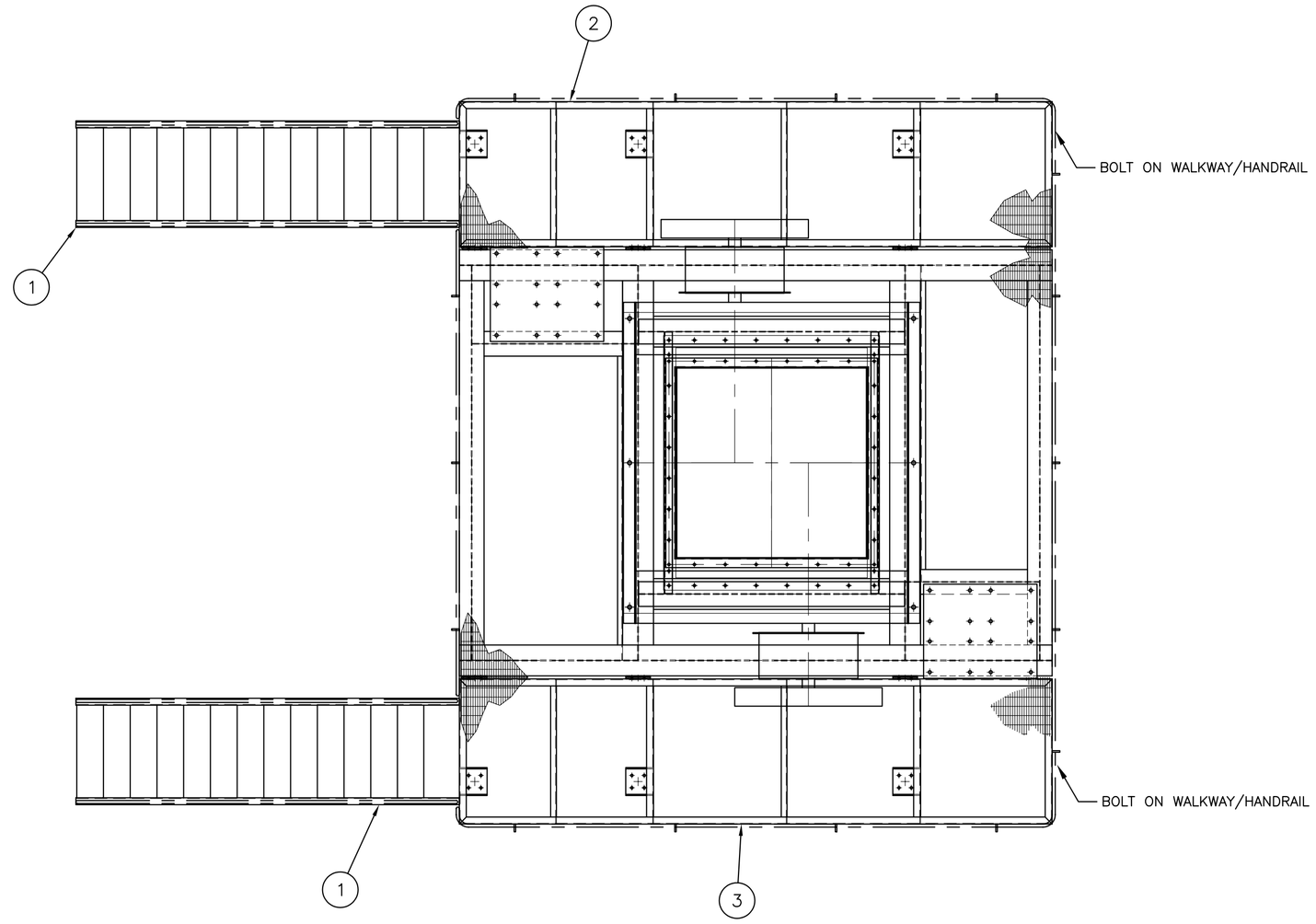


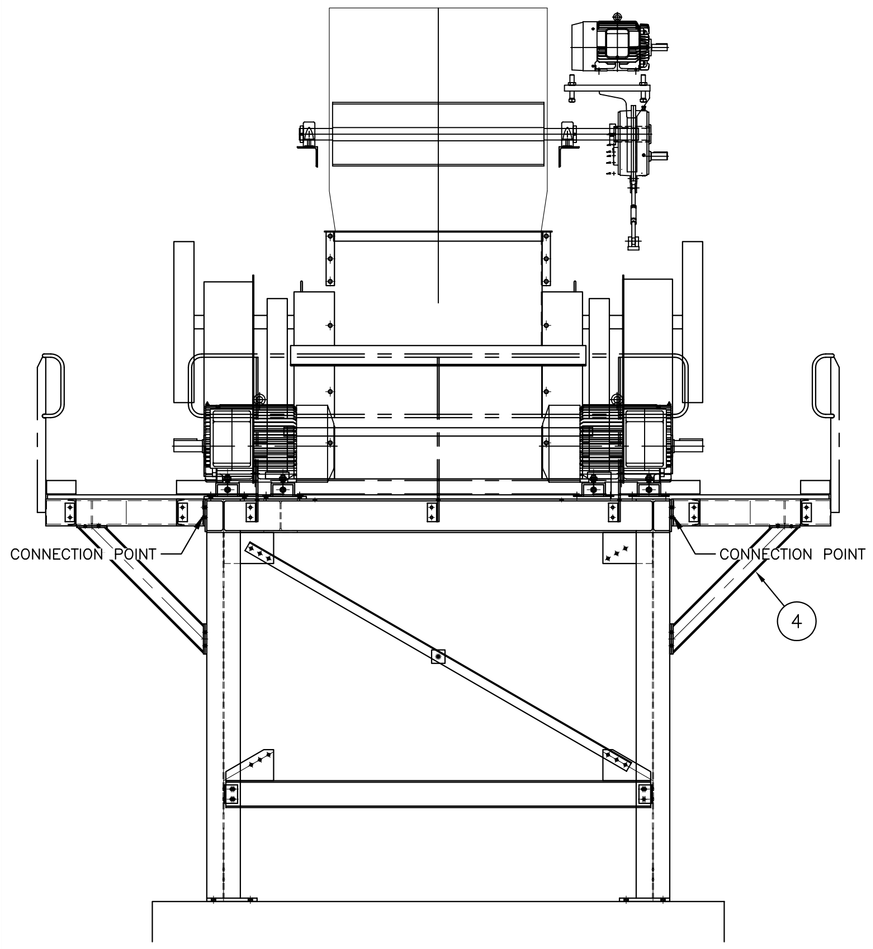


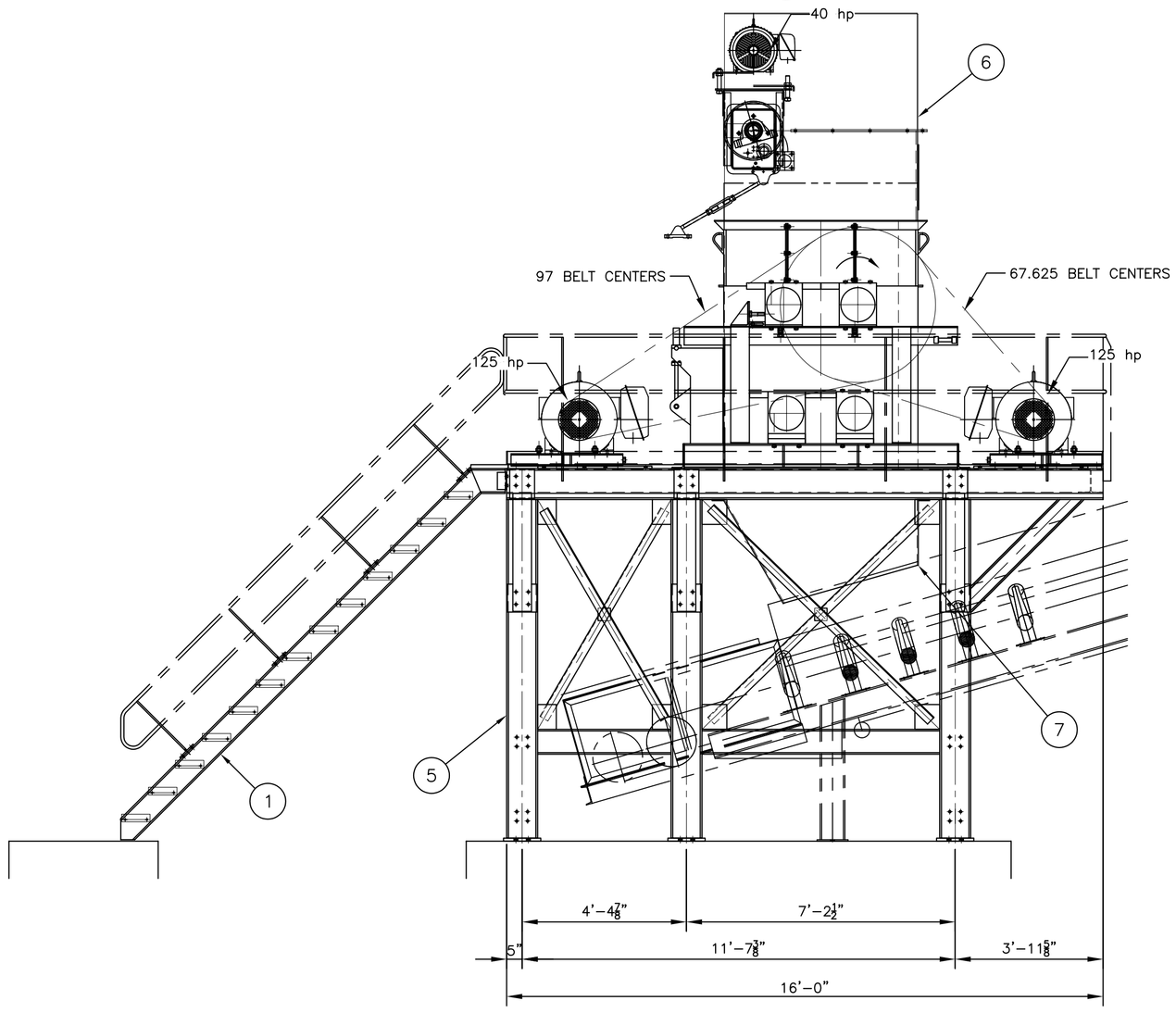


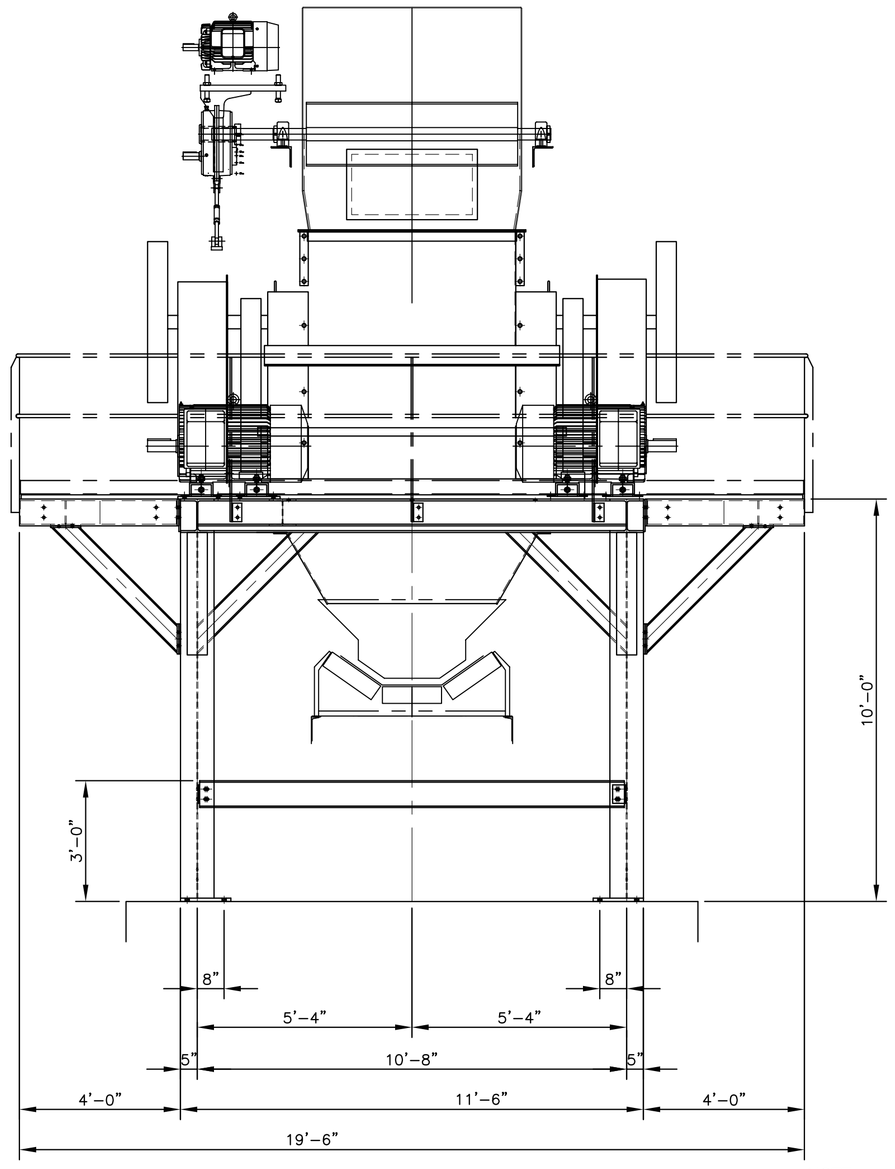


U.S. EQUIPMENT DISTRIBUTORS

NOTE:
ALL UNSPECIFIED HOLES TO BE 13/16 ø

**U.S.EQUIPMENT DISTRIBUTORS**
HUNTINGTON,WV 25705
PHONE NO. (304) 525–0002

| | | | |
|---|---|---|---|
| SCALE 3/8"=1'–0" | REVISIONS | BY | DATE |
| DATE 10/23/07 | | | |
| DR'N. PAC CKD. | | | |
| AP'VD. | | | |
| TITLE 4060D CRUSHER PLATFORM | | NO. D–8643–L | |